Integrated Device Technology, Inc.

FAST CMOS OCTAL TRANSPARENT LATCHES

IDT54/74FCT373T/AT/CT/DT - 2373T/AT/CT
IDT54/74FCT533T/AT/CT
IDT54/74FCT573T/AT/CT/DT - 2573T/AT/CT

FEATURES:

- **Common features:**
  - Low input and output leakage ≤1μA (max.)
  - CMOS power levels
  - True TTL input and output compatibility
    - V_{OH} = 3.3V (typ.)
    - V_{OL} = 0.3V (typ.)
  - Meets or exceeds JEDEC standard 18 specifications
  - Product available in Radiation Tolerant and Radiation Enhanced versions
  - Military product compliant to MIL-STD-883, Class B and DESC listed (dual marked)
  - Available in DIP, SOIC, SSOP, QSOP, CERPACK and LCC packages
- **Features for FCT373T/FCT533T/FCT573T:**
  - Std., A, C and D speed grades
  - High drive outputs (-15mA I_{OH}, 48mA I_{OL})
  - Power off disable outputs permit “live insertion”
- **Features for FCT2373T/FCT2573T:**
  - Std., A and C speed grades
  - Resistor output (-15mA I_{OH}, 12mA I_{OL} Com.)
    (-12mA I_{OH}, 12mA I_{OL} Mil.)
  - Reduced system switching noise

DESCRIPTION:

The FCT373T/FCT2373T, FCT533T and FCT573T/FCT2573T are octal transparent latches built using an advanced dual metal CMOS technology. These octal latches have 3-state outputs and are intended for bus oriented applications. The flip-flops appear transparent to the data when Latch Enable (LE) is HIGH. When LE is LOW, the data that meets the set-up time is latched. Data appears on the bus when the Output Enable ($\overline{OE}$) is LOW. When $\overline{OE}$ is HIGH, the bus output is in the high- impedance state.

The FCT2373T and FCT2573T have balanced drive outputs with current limiting resistors. This offers low ground bounce, minimal undershoot and controlled output fall times-reducing the need for external series terminating resistors. The FCT2xxxT parts are plug-in replacements for FCTxxxT parts.

FUNCTIONAL BLOCK DIAGRAM IDT54/74FCT373T/2373T AND IDT54/74FCT573T/2573T

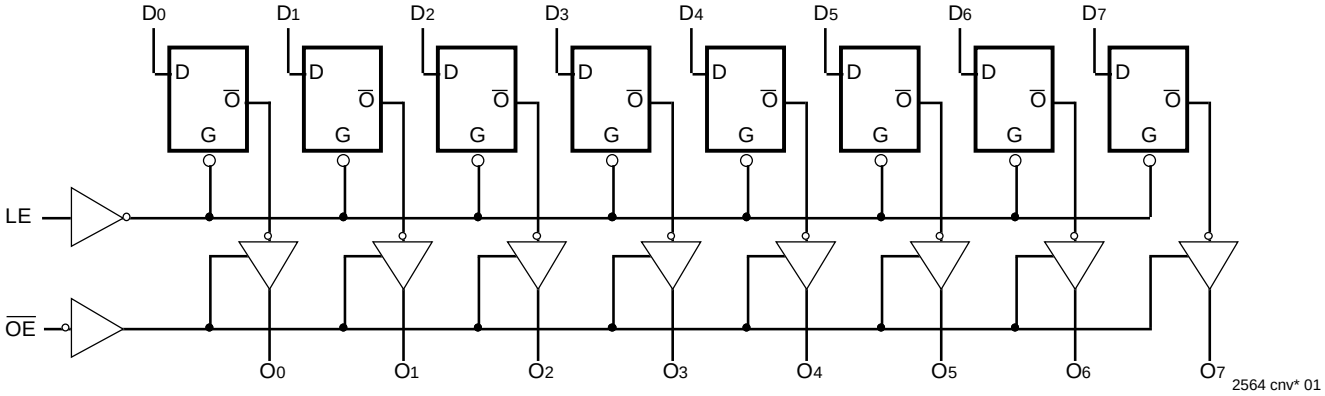

FUNCTIONAL BLOCK DIAGRAM IDT54/74FCT533T

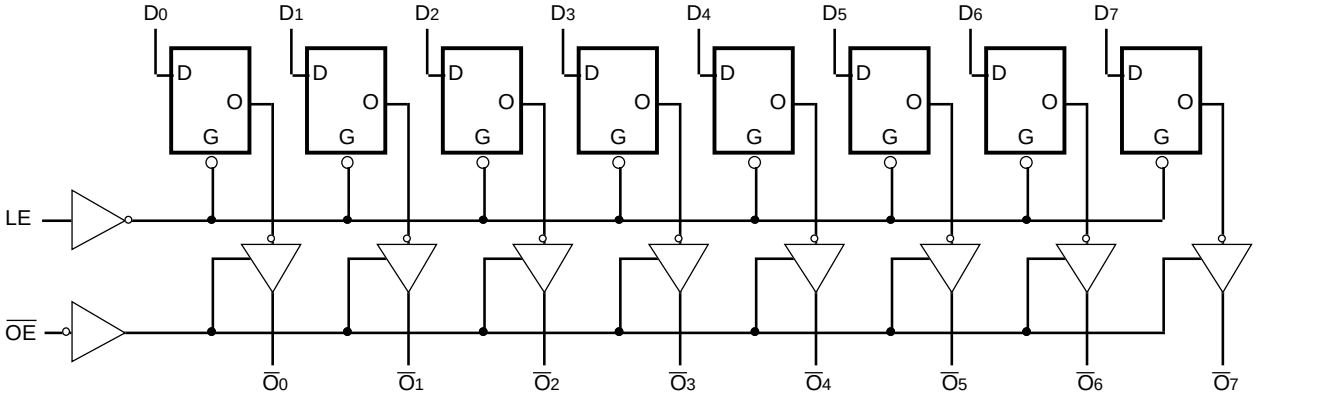

PIN CONFIGURATIONS

IDT54/74FCT373/2373T

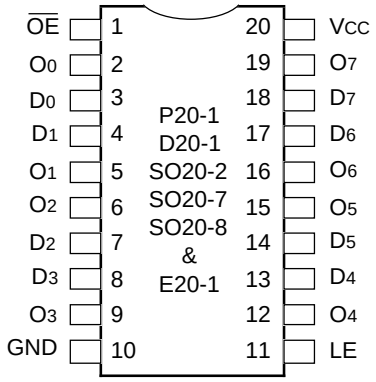

2564 cnv* 03

DIP/SOIC/SSOP/QSOP/CERPACK
TOP VIEW

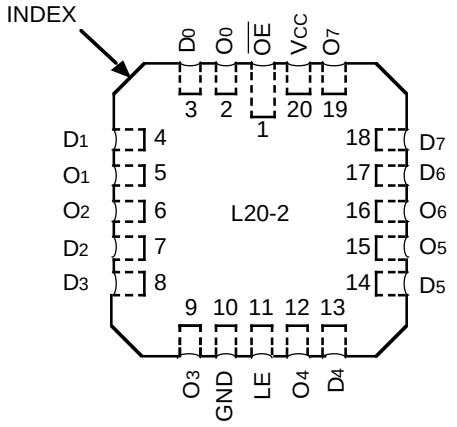

2564 cnv* 04

LCC
TOP VIEW

IDT54/74FCT573/2573T

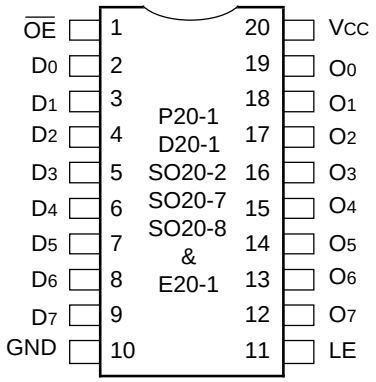

2564 cnv* 05

DIP/SOIC/SSOP/QSOP/CERPACK
TOP VIEW

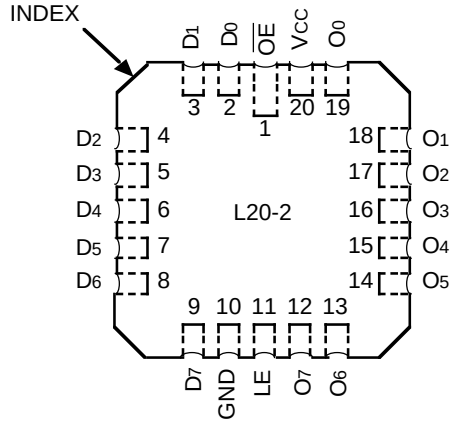

2564 cnv* 06

LCC
TOP VIEW

IDT54/74FCT533

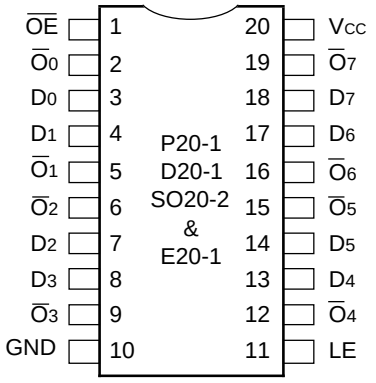

2564 cnv* 07

DIP/SOIC/CERPACK
TOP VIEW

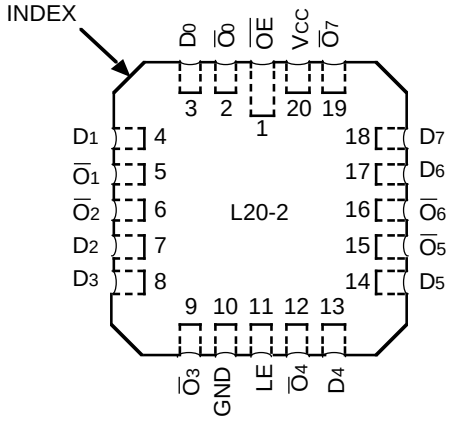

2564 cnv* 08

LCC
TOP VIEW

FUNCTION TABLE (533)[1]

Inputs			Outputs
D_N	LE	$\overline{OE}$	$\overline{O}_N$
H	H	L	L
L	H	L	H
X	X	H	Z

2564 tbl 01

NOTE:
1. H = HIGH Voltage Level
   L = LOW Voltage Level
   X = Don't Care
   Z = High Impedance

FUNCTION TABLE (373 and 573)[1]

Inputs			Outputs
D_N	LE	$\overline{OE}$	O_N
H	H	L	H
L	H	L	L
X	X	H	Z

2564 tbl 02

NOTE:
1. H = HIGH Voltage Level
   L = LOW Voltage Level
   X = Don't Care
   Z = High Impedance

DEFINITION OF FUNCTIONAL TERMS

Pin Names	Description
D_N	Data Inputs
LE	Latch Enable Input (Active HIGH)
$\overline{OE}$	Output Enable Input (Active LOW)
O_N	3-State Outputs
$\overline{O}_N$	Complementary 3-State Outputs

2564 tbll 03

ABSOLUTE MAXIMUM RATINGS[1]

Symbol	Rating	Commercial	Military	Unit
V_{TERM}[2]	Terminal Voltage with Respect to GND	–0.5 to +7.0	–0.5 to +7.0	V
V_{TERM}[3]	Terminal Voltage with Respect to GND	–0.5 to V_{CC} +0.5	–0.5 to V_{CC} +0.5	V
T_A	Operating Temperature	0 to +70	–55 to +125	°C
T_{BIAS}	Temperature Under Bias	–55 to +125	–65 to +135	°C
T_{STG}	Storage Temperature	–55 to +125	–65 to +150	°C
P_T	Power Dissipation	0.5	0.5	W
I_{OUT}	DC Output Current	–60 to +120	–60 to +120	mA

2564 lnk 04

NOTES:
1. Stresses greater than those listed under ABSOLUTE MAXIMUM RATINGS may cause permanent damage to the device. This is a stress rating only and functional operation of the device at these or any other conditions above those indicated in the operational sections of this specification is not implied. Exposure to absolute maximum rating conditions for extended periods may affect reliability. No terminal voltage may exceed V_{CC} by +0.5V unless otherwise noted.
2. Input and V_{CC} terminals only.
3. Outputs and I/O terminals only.

CAPACITANCE (T_A = +25°C, f = 1.0MHz)

Symbol	Parameter[1]	Conditions	Typ.	Max.	Unit
C_{IN}	Input Capacitance	V_{IN} = 0V	6	10	pF
C_{OUT}	Output Capacitance	V_{OUT} = 0V	8	12	pF

2564 lnk 05

NOTE:
1. This parameter is measured at characterization but not tested.

DC ELECTRICAL CHARACTERISTICS OVER OPERATING RANGE

Following Conditions Apply Unless Otherwise Specified:
Commercial: T_A = 0°C to +70°C, V_{CC} = 5.0V ± 5%; Military: T_A = –55°C to +125°C, V_{CC} = 5.0V ± 10%

Symbol	Parameter	Test Conditions[1]		Min.	Typ.[2]	Max.	Unit
V_{IH}	Input HIGH Level	Guaranteed Logic HIGH Level		2.0	—	—	V
V_{IL}	Input LOW Level	Guaranteed Logic LOW Level		—	—	0.8	V
I_{IH}	Input HIGH Current[4]	V_{CC} = Max.	V_I = 2.7V	—	—	±1	µA
I_{IL}	Input LOW Current[4]		V_I = 0.5V	—	—	±1	
I_{OZH}	High Impedance Output Current	V_{CC} = Max.	V_O = 2.7V	—	—	±1	µA
I_{OZL}	(3-State Output pins)[4]		V_O = 0.5V	—	—	±1	
I_I	Input HIGH Current[4]	V_{CC} = Max., V_I = V_{CC} (Max.)		—	—	±1	µA
V_{IK}	Clamp Diode Voltage	V_{CC} = Min., I_{IN} = –18mA		—	–0.7	–1.2	V
V_H	Input Hysteresis	—		—	200	—	mV
I_{CC}	Quiescent Power Supply Current	V_{CC} = Max., V_{IN} = GND or V_{CC}		—	0.01	1	mA

2564 lnk 06

OUTPUT DRIVE CHARACTERISTICS FOR FCT373T/533T/573T

Symbol	Parameter	Test Conditions[1]		Min.	Typ.[2]	Max.	Unit
V_{OH}	Output HIGH Voltage	V_{CC} = Min. V_{IN} = V_{IH} or V_{IL}	I_{OH} = –6mA MIL. I_{OH} = –8mA COM'L.	2.4	3.3	—	V
			I_{OH} = –12mA MIL. I_{OH} = –15mA COM'L.	2.0	3.0	—	V
V_{OL}	Output LOW Voltage	V_{CC} = Min. V_{IN} = V_{IH} or V_{IL}	I_{OL} = 32mA MIL. I_{OL} = 48mA COM'L.	—	0.3	0.5	V
I_{OS}	Short Circuit Current	V_{CC} = Max., V_O = GND[3]		–60	–120	–225	mA
I_{OFF}	Input/Output Power Off Leakage[5]	V_{CC} = 0V, V_{IN} or V_O ≤ 4.5V		—	—	±1	µA

2564 lnk 07

OUTPUT DRIVE CHARACTERISTICS FOR FCT2373T/2573T

Symbol	Parameter	Test Conditions[1]		Min.	Typ.[2]	Max.	Unit
I_{ODL}	Output LOW Current	V_{CC} = 5V, V_{IN} = V_{IH} or V_{IL}, V_{OUT} = 1.5V[3]		16	48	—	mA
I_{ODH}	Output HIGH Current	V_{CC} = 5V, V_{IN} = V_{IH} or V_{IL}, V_{OUT} = 1.5V[3]		–16	–48	—	mA
V_{OH}	Output HIGH Voltage	V_{CC} = Min. V_{IN} = V_{IH} or V_{IL}	I_{OH} = –12mA MIL. I_{OH} = –15mA COM'L.	2.4	3.3	—	V
V_{OL}	Output LOW Voltage	V_{CC} = Min. V_{IN} = V_{IH} or V_{IL}	I_{OL} = 12mA	—	0.3	0.50	V

2564 lnk 08

NOTES:

1. For conditions shown as Max. or Min., use appropriate value specified under Electrical Characteristics for the applicable device type.
2. Typical values are at Vcc = 5.0V, +25°C ambient.
3. Not more than one output should be shorted at one time. Duration of the short circuit test should not exceed one second.
4. The test limit for this parameter is ±5µA at T_A = –55°C.
5. This parameter is guaranteed but not tested.

POWER SUPPLY CHARACTERISTICS

Symbol	Parameter	Test Conditions[1]			Min.	Typ.[2]	Max.	Unit
ΔI_{CC}	Quiescent Power Supply Current TTL Inputs HIGH	V_{CC} = Max. V_{IN} = 3.4V[3]			—	0.5	2.0	mA
I_{CCD}	Dynamic Power Supply Current[4]	V_{CC} = Max. Outputs Open $\overline{OE}$ = GND One Input Toggling 50% Duty Cycle	V_{IN} = V_{CC} V_{IN} = GND	FCTxxxT	—	0.15	0.25	mA/ MHz
				FCT2xxxT	—	0.06	0.12	
I_C	Total Power Supply Current[6]	V_{CC} = Max. Outputs Open fi = 10MHz 50% Duty Cycle $\overline{OE}$ = GND LE = V_{CC} One Bit Toggling	V_{IN} = V_{CC} V_{IN} = GND	FCTxxxT	—	1.5	3.5	mA
				FCT2xxxT	—	0.6	2.2	
			V_{IN} = 3.4 V_{IN} = GND	FCTxxxT	—	1.8	4.5	
				FCT2xxxT		0.9	3.2	
		V_{CC} = Max. Outputs Open fi = 2.5MHz 50% Duty Cycle $\overline{OE}$ = GND LE = V_{CC} Eight Bits Toggling	V_{IN} = V_{CC} V_{IN} = GND	FCTxxxT	—	3.0	6.0[5]	
				FCT2xxxT	—	1.2	3.4[5]	
			V_{IN} = 3.4 V_{IN} = GND	FCTxxxT	—	5.0	14.0[5]	
				FCT2xxxT	—	3.2	11.4[5]	

2564 tbl 09

NOTES:
1. For conditions shown as Max. or Min., use appropriate value specified under Electrical Characteristics for the applicable device type.
2. Typical values are at V_{CC} = 5.0V, +25°C ambient.
3. Per TTL driven input (V_{IN} = 3.4V). All other inputs at V_{CC} or GND.
4. This parameter is not directly testable, but is derived for use in Total Power Supply Calculations.
5. Values for these conditions are examples of the I_{CC} formula. These limits are guaranteed but not tested.
6. $I_C = I_{QUIESCENT} + I_{INPUTS} + I_{DYNAMIC}$
   $I_C = I_{CC} + \Delta I_{CC} D_H N_T + I_{CCD} (f_{CP}/2 + f_i N_i)$
   I_{CC} = Quiescent Current
   ΔI_{CC} = Power Supply Current for a TTL High Input (V_{IN} = 3.4V)
   D_H = Duty Cycle for TTL Inputs High
   N_T = Number of TTL Inputs at D_H
   I_{CCD} = Dynamic Current Caused by an Input Transition Pair (HLH or LHL)
   f_{CP} = Clock Frequency for Register Devices (Zero for Non-Register Devices)
   f_i = Input Frequency
   N_i = Number of Inputs at f_i
   All currents are in milliamps and all frequencies are in megahertz.

SWITCHING CHARACTERISTICS OVER OPERATING RANGE

Symbol	Parameter	Conditions[1]	FCT373T/2373T/573T/2573T				FCT373AT/2373AT/573AT/2573AT				Unit
			Com'l.		Mil.		Com'l.		Mil.		
			Min.[2]	Max.	Min.[2]	Max.	Min.[2]	Max.	Min.[2]	Max.	
t_{PLH} t_{PHL}	Propagation Delay D_N to O_N	C_L = 50pF R_L = 500Ω	1.5	8.0	1.5	8.5	1.5	5.2	1.5	5.6	ns
t_{PLH} t_{PHL}	Propagation Delay LE to O_N		2.0	13.0	2.0	15.0	2.0	8.5	2.0	9.8	ns
t_{PZH} t_{PZL}	Output Enable Time		1.5	12.0	1.5	13.5	1.5	6.5	1.5	7.5	ns
t_{PHZ} t_{PLZ}	Output Disable Time		1.5	7.5	1.5	10.0	1.5	5.5	1.5	6.5	ns
t_{SU}	Set-up Time HIGH or LOW, D_N to LE		2.0	—	2.0	—	2.0	—	2.0	—	ns
t_H	Hold Time HIGH or LOW, D_N to LE		1.5	—	1.5	—	1.5	—	1.5	—	ns
t_W	LE Pulse Width HIGH		6.0	—	6.0	—	5.0	—	6.0	—	ns

2564 tbl 10

Symbol	Parameter	Conditions[1]	FCT373CT/2373CT/573CT/2573CT				FCT373DT/573DT				Unit
			Com'l.		Mil.		Com'l.		Mil.		
			Min.[2]	Max.	Min.[2]	Max.	Min.[2]	Max.	Min.[2]	Max.	
t_{PLH} t_{PHL}	Propagation Delay D_N to O_N	C_L = 50pF R_L = 500Ω	1.5	4.2	1.5	5.1	1.5	3.8	—	—	ns
t_{PLH} t_{PHL}	Propagation Delay LE to O_N		2.0	5.5	2.0	8.0	2.0	4.0	—	—	ns
t_{PZH} t_{PZL}	Output Enable Time		1.5	5.5	1.5	6.3	1.5	4.8	—	—	ns
t_{PHZ} t_{PLZ}	Output Disable Time		1.5	5.0	1.5	5.9	1.5	4.0	—	—	ns
t_{SU}	Set-up Time HIGH or LOW, D_N to LE		2.0	—	2.0	—	1.5	—	—	—	ns
t_H	Hold Time HIGH or LOW, D_N to LE		1.5	—	1.5	—	1.0	—	—	—	ns
t_W	LE Pulse Width HIGH[3]		5.0	—	6.0	—	3.0	—	—	—	ns

2564 tbl 11

Symbol	Parameter	Conditions[1]	FCT533T				FCT533AT				FCT533CT				Unit
			Com'l.		Mil.		Com'l.		Mil.		Com'l.		Mil.		
			Min.[2]	Max.	Min.[2]	Max.	Min.[2]	Max.	Min.[2]	Max.	Min.[2]	Max.	Min.[2]	Max.	
t_{PLH} t_{PHL}	Propagation Delay D_N to $\overline{O}_N$	C_L = 50pF R_L = 500Ω	1.5	10.0	1.5	12.0	1.5	5.2	1.5	5.6	1.5	4.2	1.5	5.1	ns
t_{PLH} t_{PHL}	Propagation Delay LE to $\overline{O}_N$		2.0	13.0	2.0	14.0	2.0	8.5	2.0	9.8	2.0	5.5	2.0	8.0	ns
t_{PZH} t_{PZL}	Output Enable Time		1.5	11.0	1.5	12.5	1.5	6.5	1.5	7.5	1.5	5.5	1.5	6.3	ns
t_{PHZ} t_{PLZ}	Output Disable Time		1.5	7.0	1.5	8.5	1.5	5.5	1.5	6.5	1.5	5.0	1.5	5.9	ns
t_{SU}	Set-up Time HIGH or LOW, D_N to LE		2.0	—	2.0	—	2.0	—	2.0	—	2.0	—	2.0	—	ns
t_H	Hold Time HIGH or LOW, D_N to LE		1.5	—	1.5	—	1.5	—	1.5	—	1.5	—	1.5	—	ns
t_W	LE Pulse Width HIGH		6.0	—	6.0	—	5.0	—	6.0	—	5.0	—	6.0	—	ns

2564 tbl 12

NOTES:
1. See test circuit and waveforms.
2. Minimum limits are guaranteed but not tested on Propagation Delays.
3. This parameter is guaranteed but not tested.

TEST CIRCUITS AND WAVEFORMS

TEST CIRCUITS FOR ALL OUTPUTS

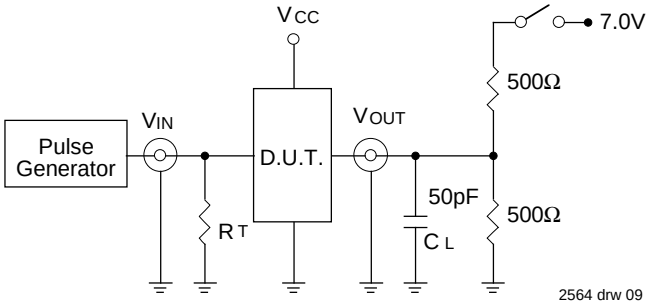

SWITCH POSITION

Test	Switch
Open Drain Disable Low Enable Low	Closed
All Other Tests	Open

2564 lnk 13

DEFINITIONS:

C_L= Load capacitance: includes jig and probe capacitance.

R_T = Termination resistance: should be equal to Z_{OUT} of the Pulse Generator.

SET-UP, HOLD AND RELEASE TIMES

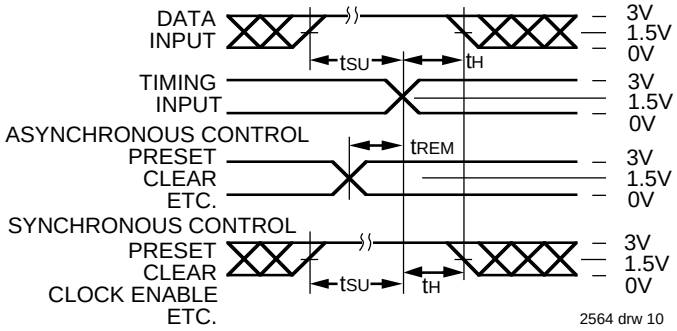

PULSE WIDTH

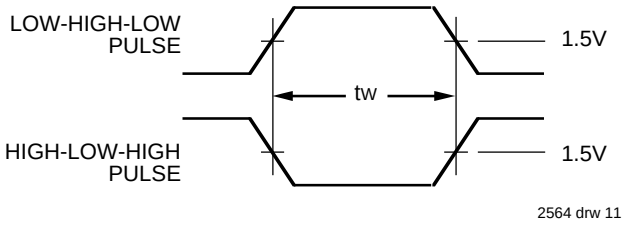

PROPAGATION DELAY

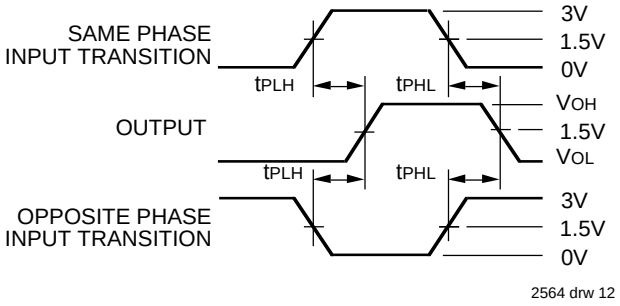

ENABLE AND DISABLE TIMES

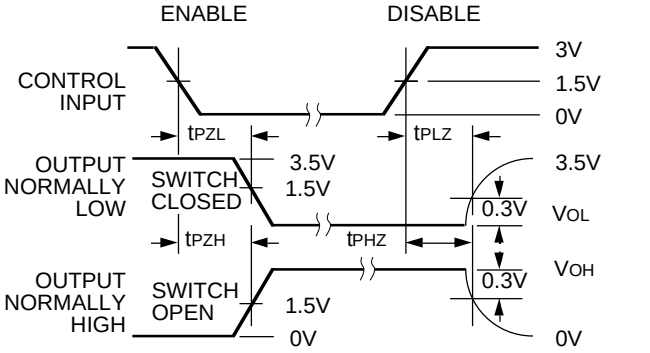

NOTES:

1. Diagram shown for input Control Enable-LOW and input Control Disable-HIGH
2. Pulse Generator for All Pulses: Rate ≤ 1.0MHz; t_F ≤ 2.5ns; t_R ≤ 2.5ns

ORDERING INFORMATION

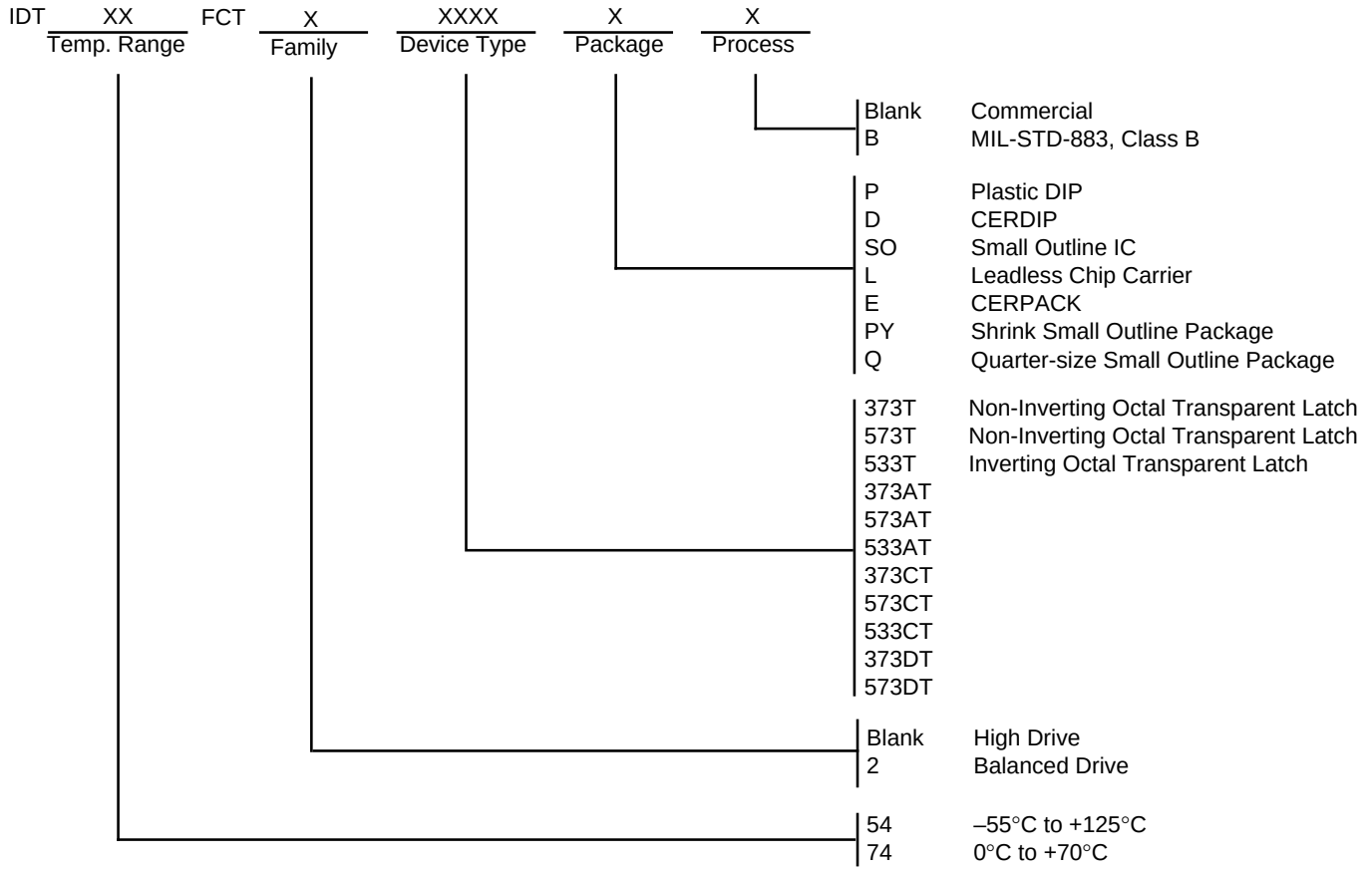

2564 drw 14