MOTOROLA

MC3419-1L

TELEPHONE LINE-FEED CIRCUIT

. . . designed as the heart of a circuit to provide BORSHT functions for telephone service in Central Office, PABX, and Subscriber Carrier equipment. This circuit provides dc power for the telephone (Battery), Overvoltage protection, Supervision features such as hook status and dial pulsing, two-wire differential to four-wire single-ended conversions and suppression of longitudinal signals at the two-wire input (Hybrid), and facilitates ringing insertion, Ring trip detection and Testing.

- Totally Upward Compatible with the MC3419
- All Key Parameters Externally Programmable
- Current Sensing Outputs Monitor Status of Both Tip and Ring Leads for Auxiliary Functions such as: Ground Key, Ring Trip, Message Waiting Lamp, etc.
- On-Hook Power Below 5.0 mW
- Digital Hook Status Output
- Powerdown Input
- Ground Fault Protection
- Operates from Single −20 V to −56 V Power Source
- Size and Weight Reduction Over Conventional Approaches
- The sale of this product is licensed under Patent No. 4,004,109. All royalties related to this patent are included in the unit price.

SUBSCRIBER LOOP INTERFACE CIRCUIT (SLIC)

BIPOLAR LASER-TRIMMED INTEGRATED CIRCUIT

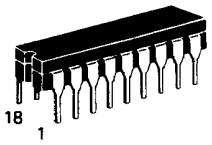

L SUFFIX
CERAMIC PACKAGE
CASE 726-04
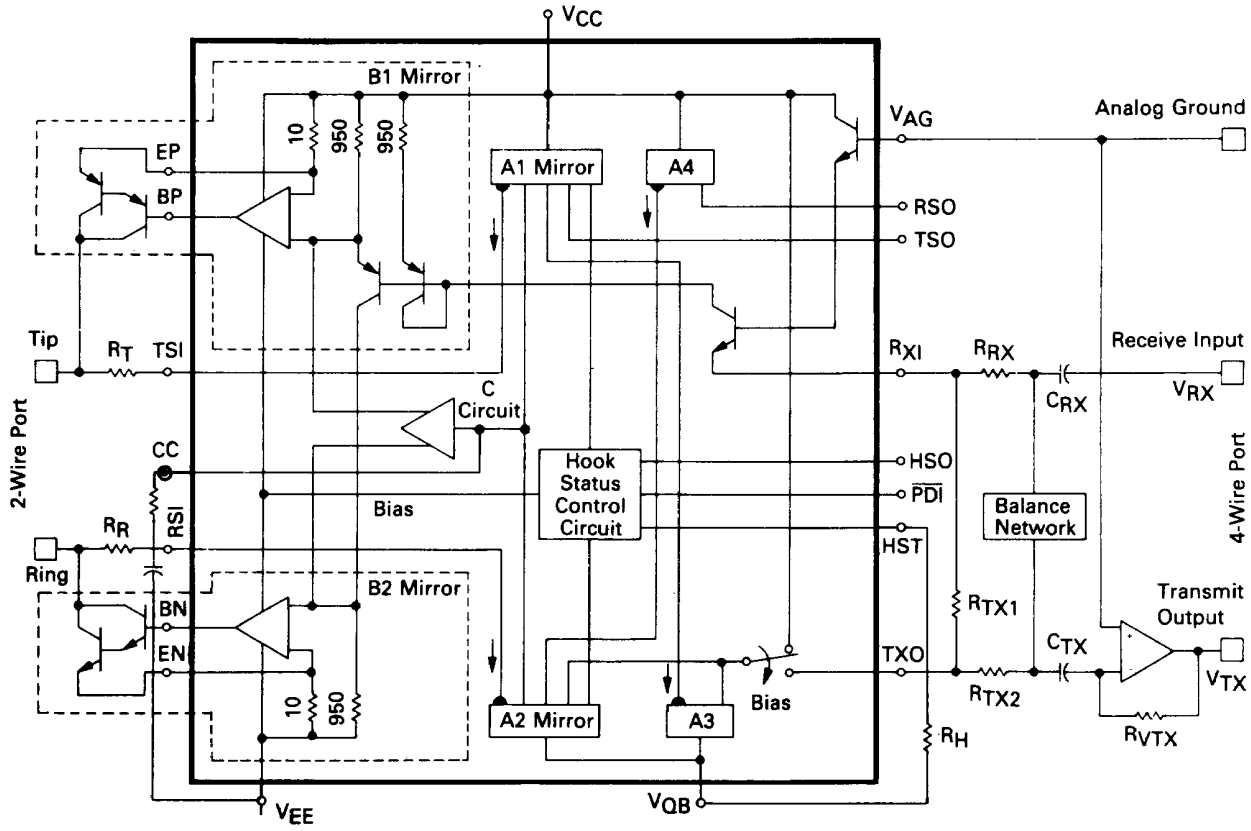
FUNCTIONAL BLOCK DIAGRAM