This version: Mar. 3. 1999

OKI Semiconductor

MSC23B236D-xxBS8/DS8

2,097,152-word x 36-bit DYNAMIC RAM MODULE : FAST PAGE MODE TYPE

DESCRIPTION

The MSC23B236D-xxBS8/DS8 is a fully decoded, 2,097,152-word x 36-bit CMOS dynamic random access memory module composed of four 16Mb DRAMs in SOJ packages and four 2Mb DRAMs in SOJ packages mounted with eight decoupling capacitors on a 72-pin glass epoxy single-inline package. This module supports any application where high density and large capacity of storage memory are required.

FEATURES

· 2,097,152-word x 36-bit organization
· 72-pin Single Inline Memory Module
  MSC23B236D-xxBS8 : Gold tab
  MSC23B236D-xxDS8 : Solder tab
· Single +5V supply ± 10% tolerance
· Input : TTL compatible
· Output : TTL compatible, 3-state
· Refresh : 1024cycles/16ms
· /CAS before /RAS refresh, hidden refresh, /RAS only refresh capability
· Fast page mode capability

PRODUCT FAMILY

Family	Access Time (Max.)			Cycle Time (Min.)	Power Dissipation	
	t_{RAC}	t_{AA}	t_{CAC}		Operating (Max.)	Standby (Max.)
MSC23B236D-60BS8/DS8	60ns	30ns	15ns	110ns	2365mW	44mW
MSC23B236D-70BS8/DS8	70ns	35ns	20ns	130ns	2145mW	

MODULE OUTLINE

MSC23B236D-xxBS8/DS8 (Unit : mm)

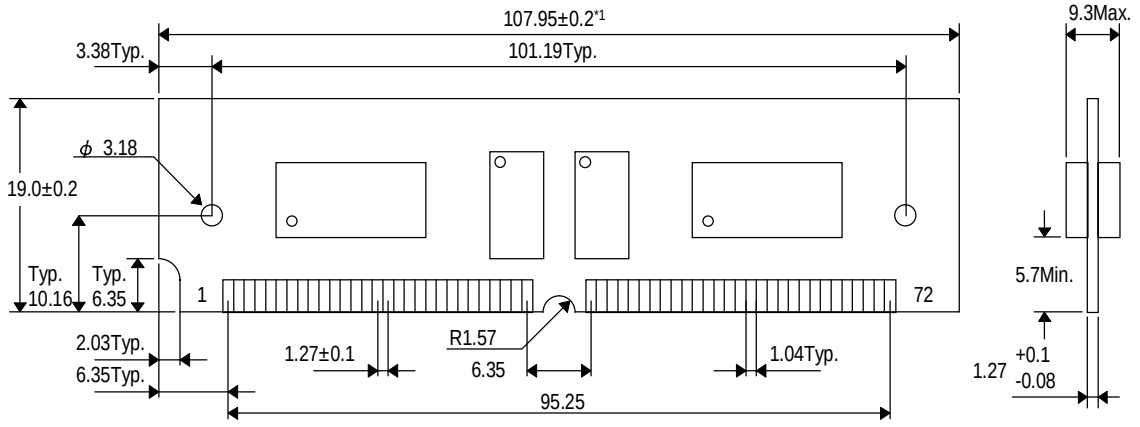

*1 The common size difference of the board width 12.5mm of its height is specified as ±0.2.
The value above 12.5mm is specified as ±0.5.

PIN CONFIGURATION

Pin No.	Pin Name	Pin No.	Pin Name	Pin No.	Pin Name	Pin No.	Pin Name
1	V_{SS}	19	NC	37	DQ17	55	DQ12
2	DQ0	20	DQ4	38	DQ35	56	DQ30
3	DQ18	21	DQ22	39	V_{SS}	57	DQ13
4	DQ1	22	DQ5	40	/CAS0	58	DQ31
5	DQ19	23	DQ23	41	/CAS2	59	V_{CC}
6	DQ2	24	DQ6	42	/CAS3	60	DQ32
7	DQ20	25	DQ24	43	/CAS1	61	DQ14
8	DQ3	26	DQ7	44	/RAS0	62	DQ33
9	DQ21	27	DQ25	45	/RAS1	63	DQ15
10	V_{CC}	28	A7	46	NC	64	DQ34
11	NC	29	NC	47	/WE	65	DQ16
12	A0	30	V_{CC}	48	NC	66	NC
13	A1	31	A8	49	DQ9	67	PD1
14	A2	32	A9	50	DQ27	68	PD2
15	A3	33	/RAS3	51	DQ10	69	PD3
16	A4	34	/RAS2	52	DQ28	70	PD4
17	A5	35	DQ26	53	DQ11	71	NC
18	A6	36	DQ8	54	DQ29	72	V_{SS}

Presence Detect Pins

Pin No.	Pin Name	MSC23B236D -60BS8/DS8	MSC23B236D -70BS8/DS8
67	PD1	NC	NC
68	PD2	NC	NC
69	PD3	NC	V_{SS}
70	PD4	NC	NC

BLOCK DIAGRAM

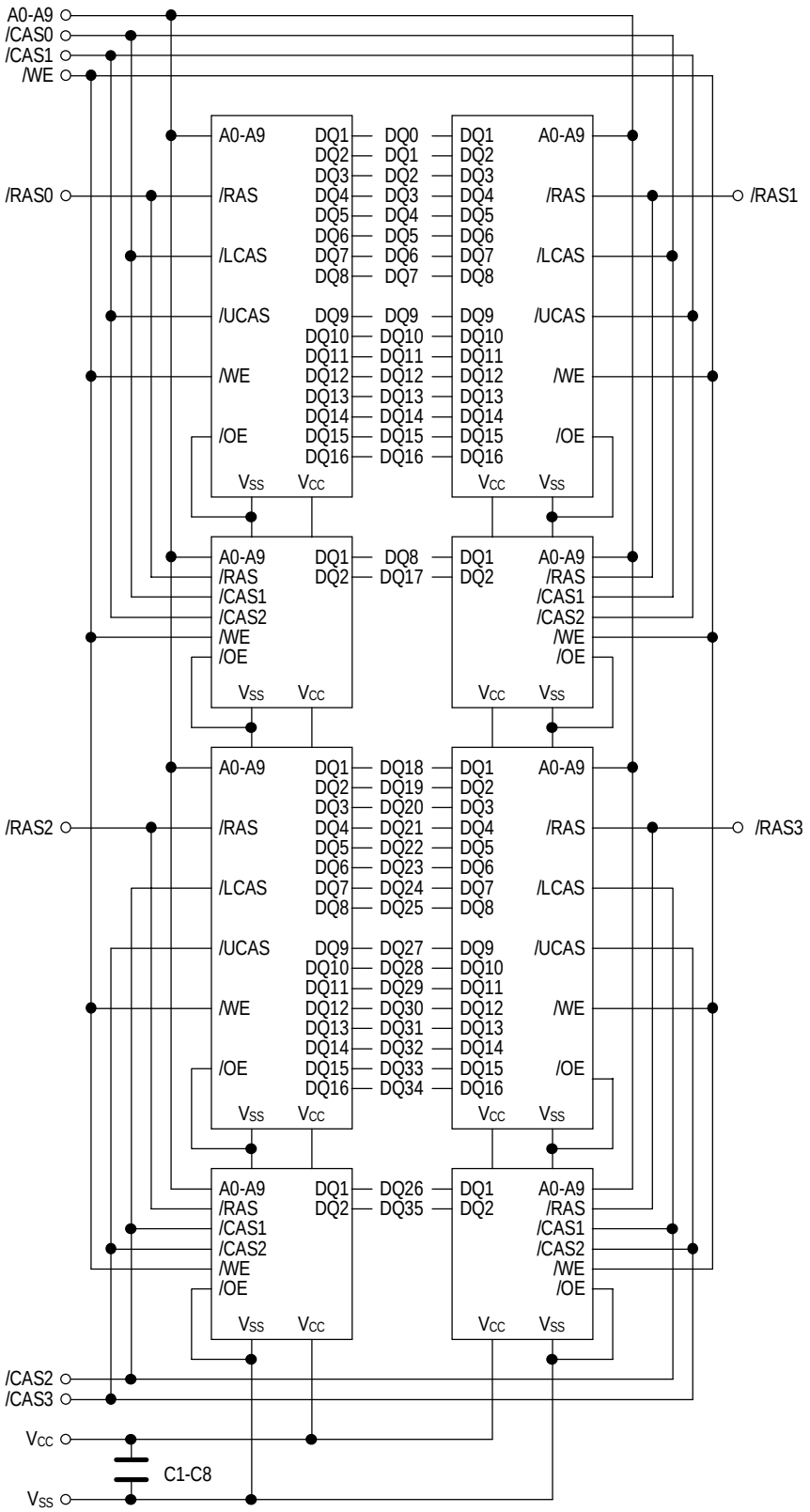

ELECTRICAL CHARACTERISTICS

Absolute Maximum Ratings

Parameter	Symbol	Rating	Unit
Voltage on Any Pin Relative to V_{SS}	V_{IN}, V_{OUT}	-1.0 to +7.0	V
Voltage on V_{CC} Supply Relative to V_{SS}	V_{CC}	-1.0 to +7.0	V
Short Circuit Output Current	I_{OS}	50	mA
Power Dissipation	P_D *	8	W
Operating Temperature	T_{OPR}	0 to +70	°C
Storage Temperature	T_{STG}	-40 to +125	°C

* Ta = 25°C

Recommended Operating Conditions

(Ta = 0°C to +70°C)

Parameter	Symbol	Min.	Typ.	Max.	Unit
Power Supply Voltage	V_{CC}	4.5	5.0	5.5	V
	V_{SS}	0	0	0	V
Input High Voltage	V_{IH}	2.4	-	6.5	V
Input Low Voltage	V_{IL}	-1.0	-	0.8	V

Capacitance

(V_{CC} = 5V ± 10%, Ta = 25°C, f = 1 MHz)

Parameter	Symbol	Typ.	Max.	Unit
Input Capacitance (A0 - A9)	C_{IN1}	-	53	pF
Input Capacitance (/WE)	C_{IN2}	-	65	pF
Input Capacitance (/RAS0- /RAS3)	C_{IN3}	-	20	pF
Input Capacitance (/CAS0- /CAS3)	C_{IN4}	-	35	pF
I/O Capacitance (DQ0 - DQ35)	C_{DQ}	-	20	pF

Note: Capacitance measured with Boonton Meter.

DC Characteristics

(V_{CC} = 5V ± 10%, Ta = 0°C to +70°C)

Parameter	Symbol	Condition	MSC23B236D -60BS8/DS8		MSC23B236D -70BS8/DS8		Unit	Note
			Min.	Max.	Min.	Max.		
Input Leakage Current	I_{LI}	0V ≤ V_{IN} ≤ 6.5V; All other pins not under test = 0V	-80	80	-80	80	µA	
Output Leakage Current	I_{LO}	DQ disable 0V ≤ V_{OUT} ≤ 5.5V	-20	20	-20	20	µA	
Output High Voltage	V_{OH}	I_{OH} = -5.0mA	2.4	V_{CC}	2.4	V_{CC}	V	
Output Low Voltage	V_{OL}	I_{OL} = 4.2mA	0	0.4	0	0.4	V	
Average Power Supply Current (Operating)	I_{CC1}	/RAS, /CAS cycling, t_{RC} = min.	-	430	-	390	mA	1, 2
Power supply current (Standby)	I_{CC2}	/RAS, /CAS = V_{IH}	-	16	-	16	mA	1
		/RAS, /CAS ≥ V_{CC} -0.2V	-	8	-	8	mA	1
Average Power Supply Current (/RAS only refresh)	I_{CC3}	/RAS cycling, /CAS = V_{IH}, t_{RC} = min.	-	430	-	390	mA	1, 2
Average Power Supply Current (/CAS before /RAS refresh)	I_{CC6}	/RAS cycling, /CAS before /RAS	-	430	-	390	mA	1, 2
Average Power Supply Current (Fast Page Mode)	I_{CC7}	/RAS = V_{IL}, /CAS cycling, t_{PC} = min.	-	390	-	360	mA	1, 3

Notes:
1. I_{CC} Max. is specified as I_{CC} for output open condition.
2. Address can be changed once or less while /RAS = V_{IL}.
3. Address can be changed once or less while /CAS = V_{IH}.

AC Characteristics (1/2)

(V_{CC} = 5V ± 10%, Ta = 0°C to +70°C) Note: 1, 2, 3

Parameter	Symbol	MSC23B236D -60BS8/DS8		MSC23B236D -70BS8/DS8		Unit	Note
		Min.	Max.	Min.	Max.		
Random Read or Write Cycle Time	t_{RC}	110	-	130	-	ns	
Fast Page Mode Cycle Time	t_{PC}	40	-	45	-	ns	
Access Time from /RAS	t_{RAC}	-	60	-	70	ns	4, 5, 6
Access Time from /CAS	t_{CAC}	-	15	-	20	ns	4, 5
Access Time from Column Address	t_{AA}	-	30	-	35	ns	4, 6
Access Time from /CAS Precharge	t_{CPA}	-	35	-	40	ns	4
Output Low Impedance Time from /CAS	t_{CLZ}	0	-	0	-	ns	4
/CAS to Data Output Buffer Turn-off Delay Time	t_{OFF}	0	15	0	20	ns	7
Transition Time	t_T	3	50	3	50	ns	3
Refresh Period	t_{REF}	-	16	-	16	ms	
/RAS Precharge Time	t_{RP}	40	-	50	-	ns	
/RAS Pulse Width	t_{RAS}	60	10K	70	10K	ns	
/RAS Pulse Width (Fast Page Mode)	t_{RASP}	60	100K	70	100K	ns	
/RAS Hold Time	t_{RSH}	15	-	20	-	ns	
/CAS Precharge Time (Fast Page Mode)	t_{CP}	10	-	10	-	ns	
/CAS Pulse Width	t_{CAS}	15	10K	20	10K	ns	
/CAS Hold Time	t_{CSH}	60	-	70	-	ns	
/CAS to /RAS Precharge Time	t_{CRP}	5	-	5	-	ns	
/RAS Hold Time from /CAS Precharge	t_{RHCP}	35	-	40	-	ns	
/RAS to /CAS Delay Time	t_{RCD}	20	45	20	50	ns	5
/RAS to Column Address Delay Time	t_{RAD}	15	30	15	35	ns	6
Row Address Set-up Time	t_{ASR}	0	-	0	-	ns	
Row Address Hold Time	t_{RAH}	10	-	10	-	ns	
Column Address Set-up Time	t_{ASC}	0	-	0	-	ns	
Column Address Hold Time	t_{CAH}	15	-	15	-	ns	
Column Address to /RAS Lead Time	t_{RAL}	30	-	35	-	ns	
Read Command Set-up Time	t_{RCS}	0	-	0	-	ns	
Read Command Hold Time	t_{RCH}	0	-	0	-	ns	8
Read Command Hold Time referenced to /RAS	t_{RRH}	0	-	0	-	ns	8

AC Characteristics (2/2)

(V_{CC} = 5V ± 10%, Ta = 0°C to +70°C) Note: 1, 2, 3

Parameter	Symbol	MSC23B236D -60BS8/DS8		MSC23B236D -70BS8/DS8		Unit	Note
		Min.	Max.	Min.	Max.		
Write Command Set-up Time	t_{WCS}	0	-	0	-	ns	
Write Command Hold Time	t_{WCH}	10	-	15	-	ns	
Write Command Pulse Width	t_{WP}	10	-	10	-	ns	
Write Command to /RAS Lead Time	t_{RWL}	15	-	20	-	ns	
Write Command to /CAS Lead Time	t_{CWL}	15	-	20	-	ns	
Data-in Set-up Time	t_{DS}	0	-	0	-	ns	
Data-in Hold Time	t_{DH}	15	-	15	-	ns	
/CAS Active Delay Time from /RAS Precharge	t_{RPC}	5	-	5	-	ns	
/RAS to /CAS Set-up Time (/CAS before /RAS)	t_{CSR}	10	-	10	-	ns	
/RAS to /CAS Hold Time (/CAS before /RAS)	t_{CHR}	10	-	10	-	ns	

Notes:

1. A start-up delay of 200µs is required after power-up, followed by a minimum of eight initialization cycles (/RAS only refresh or /CAS before /RAS refresh) before proper device operation is achieved.

2. The AC characteristics assumes t_T = 5ns.

3. V_{IH}(Min.) and V_{IL}(Max.) are reference levels for measuring input timing signals. Transition time (t_T) are measured between V_{IH} and V_{IL}.

4. This parameter is measured with a load circuit equivalent to 2TTL loads and 100pF.

5. Operation within the t_{RCD}(Max.) limit ensures that t_{RAC}(Max.) can be met.
   t_{RCD}(Max.) is specified as a reference point only. If t_{RCD} is greater than the specified t_{RCD}(Max.) limit, then the access time is controlled by t_{CAC}.

6. Operation within the t_{RAD}(Max.) limit ensures that t_{RAC}(Max.) can be met.
   t_{RAD}(Max.) is specified as a reference point only. If t_{RAD} is greater than the specified t_{RAD}(Max.) limit, then the access time is controlled by t_{AA}.

7. t_{OFF}(Max.) define the time at which the output achieves the open circuit condition and are not referenced to output voltage levels.

8. t_{RCH} or t_{RRH} must be satisfied for a read cycle.