14.4 mm (.6”) Series

Conventional Part No.	Global Prat No.	Lighting Color
LN506RA	LNM276AA01	Red
LN506RK	LNM276KA01	Red
LN506GA	LNM376AA01	Green
LN506GK	LNM376KA01	Green

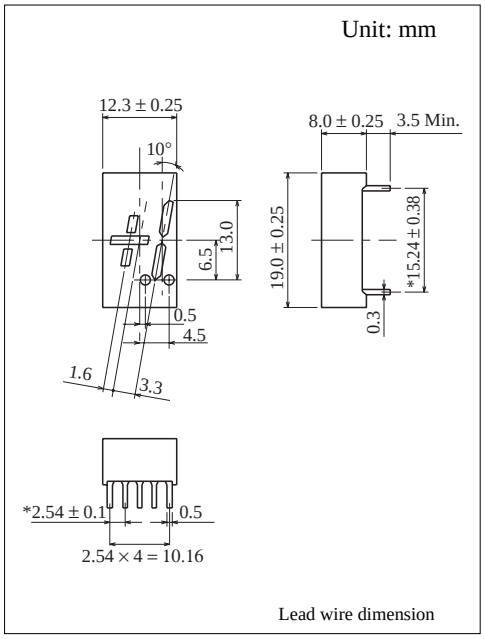

Terminal Connection

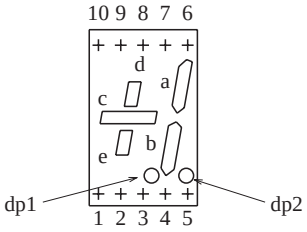

Pin No.	Assignment	Assignment
1	Cathode e	Anode e
2	Common Anode c, d, e	Common Cathode c, d, e
3	Cathode b	Anode b
4	Common Anode a, b, dp1, dp2	Common Cathode a, b, dp1, dp2
5	Cathode dp1, dp2	Anode dp1, dp2
6	Cathode a	Anode a
7	Common Anode a, b, dp1, dp2	Common Cathode a, b, dp1, dp2
8	Common Anode c, d, e	Common Cathode c, d, e
9	Cathode d	Anode d
10	Cathode c	Anode c

■ Absolute Maximum Ratings (T_a = 25°C)

Lighting Color	P_D(mW)	I_F(mA)	I_{FP}(mA)*	V_R(V)	T_{opr}(°C)	T_{stg}(°C)
Red	60	20	100	5	–25 ~ +80	–30 ~ +85
Green	60	20	100	5	–25 ~ +80	–30 ~ +85

★I_{FP}の条件は, duty 10%, Pulse width 1 msec. The condition of I_{FP} is duty 10%, Pulse width 1 msec

■ Electro–Optical Characteristics (T_a = 25°C)

Conventional Part No.	Lighting Color	Common	I_O / seg		I_O /d.p		V_F		λ_P	$\Delta\lambda$		I_R	
			Typ	Min	Typ	I_F	Typ	Max	Typ	Typ	I_F	Max	V_R
LN506RA	Red	Anode	450	150	150	5	2.2	2.8	700	100	20	10	5
LN506RK	Red	Cathode	450	150	150	5	2.2	2.8	700	100	20	10	5
LN506GA	Green	Anode	1500	500	500	10	2.2	2.8	565	30	20	10	5
LN506GK	Green	Cathode	1500	500	500	10	2.2	2.8	565	30	20	10	5
Unit	—	—	µcd	µcd	µcd	mA	V	V	nm	nm	mA	µA	V

I_O — I_F

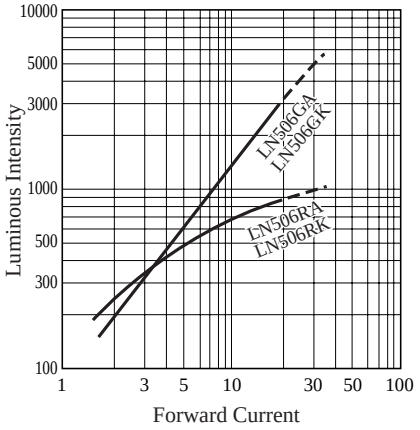

I_F — V_F

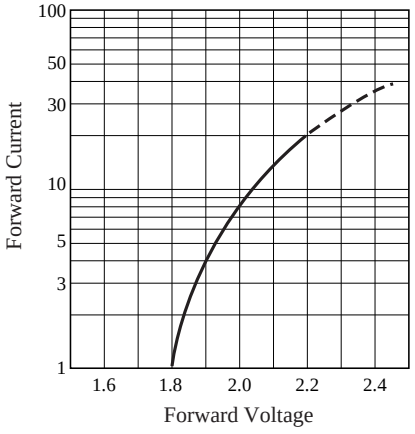
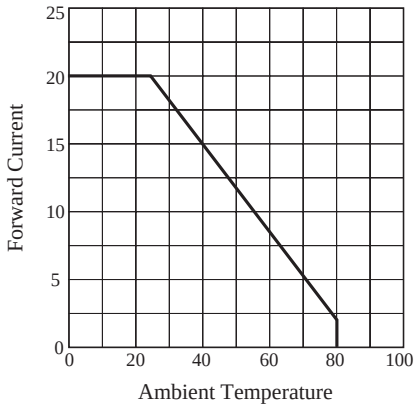
I_F — T_a