Ordering number : EN*5772

Monolithic Linear IC

LV1035M

Dolby ProLogic Decoder

Preliminaly

DOLBY SURROUND PRO • LOGIC

Overview

The LV1035M is a Dolby ProLogic surround signal-processing IC that combines the functionality of the LV1016 and LA2786 products. The LV1035M allows systems that provide both Dolby ProLogic surround functionality and a wide range of additional digital surround functions to be constructed with a single IC.

Functions

- Adaptive matrix
- Center mode control (normal, phantom, and wide)
- 4-channel/3-channel logic control
- Auto-balance (on/off)
- ProLogic off mode (bypass and full bypass)
- Center trim (0 to –31 dB) in 1-dB steps
- On-chip memory (8K SRAM)
- Variable delay time (50, 40, 30, 25, 20, 15 ms)
- New A/D and D/A converter circuits adopted.
- Dolby B noise reduction
- On-chip I/O filters
- Built-in V_{DD} circuit
- Surround trim (0 to –31 dB) in 1-dB steps
- Input and output muting functions

Features

- ProLogic surround decoder implemented in a single chip
- Wide dynamic range
- All modes can be controlled over a serial data control interface using clock, data, enable signals.

Note: Dolby and the double D symbol are registered trademarks of the Dolby Laboratories Licensing Corporation. This IC can only be used by Dolby licensees. Licensing information and corresponding technical information is available from:

Dolby Licensing Corporation
San Francisco, CA 94103-4813
USA

Package Dimensions

unit: mm

3159-QFP64E

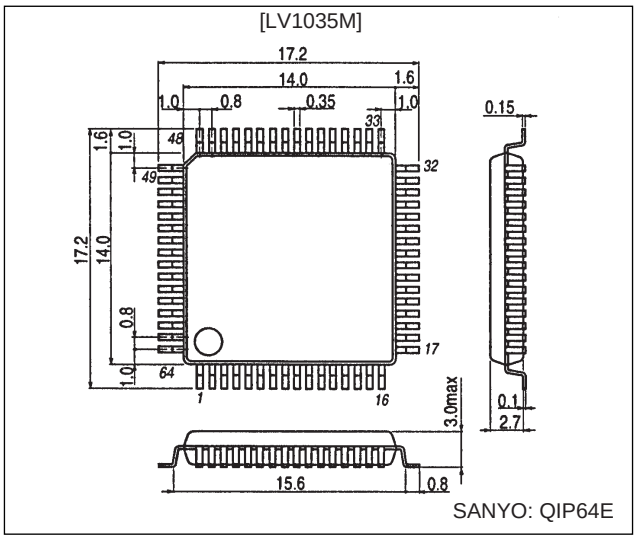

Specifications

Maximum Ratings at Ta = 25°C

Parameter	Symbol	Conditions	Ratings	Unit
Maximum supply voltage	V_{CC} max		12	V
Allowable power dissipation	Pd max		1100	mW
Operating temperature	Topr		–20 to +70	°C
Storage temperature	Tstg		–40 to +150	°C

Operating Conditions at Ta = 25°C

Parameter	Symbol	Conditions	Ratings	Unit
Recommended supply voltage	V_{CC}		9	V
Operating supply voltage range	V_{CC} op		8 to 10	V
Input high-level voltage	V_{IH}		3.5 to 5.5	V
Input low-level voltage	V_{IL}		0 to 1.5	V
Dolby level	V_O Dolby		300	mVrms

Operating Characteristics at Ta = 25°C, V_{CC} = 9 V, V_{IN} = 300 mV rms (left and right inputs), 300 mVrms x 0.707 (center and surround inputs), f = 1 kHz, center trim = 0 dB, surround trim = 0 dB, delay time = 20 ms.

Parameter	Symbol	Conditions	Ratings			Unit
			min	typ	max	
Quiescent current	I_{CC}	No signal		80	100	mA
Center channel output level	V_{OC}	L = R input	–2	0	+2	dB
Output level deviation	V_{OA}	L, R, Sch from Cch	–0.5	0	+0.5	dB
Matrix rejection: left	R_{iL}	L input		–40	–25	dB
Matrix rejection: center	R_{jC}	L = R input		–40	–25	dB
Matrix rejection: right	R_{jR}	R input		–40	–25	dB
Matrix rejection: surround	R_{jS}	L = –R input		–40	–25	dB
Left channel harmonic distortion	THD L	L output		0.03	0.09	%
Center channel harmonic distortion	THD C	C output		0.03	0.09	%
Right channel harmonic distortion	THD R	R output		0.03	0.09	%
Surround channel harmonic distortion 1	THD S1	S matrix output				%
Surround channel harmonic distortion 2	THD S2	S delay output		0.1	0.7	%
S/N, L	SN, L	L output: CCIR/ARM, Rs = 10 kΩ		–76	–71	dB
S/N, C	SN, C	C output: CCIR/ARM, Rs = 10 kΩ		–77	–71	dB
S/N, R	SN, R	R output: CCIR/ARM, Rs = 10 kΩ		–76	–71	dB
S/N, S1	SN, S	S matrix output				dB
S/N, S2	SN, S	S delay output		–75	–65	dB
Left channel signal handling	SH_L	L output: V_{CC} = 8.5 V, THD ≤ 1%	15	16		dB
Center channel signal handling	SH_C	C output: V_{CC} = 8.5 V, THD ≤ 1%	15	18		dB
Right channel signal handling	SH_R	R output: V_{CC} = 8.5 V, THD ≤ 1%	15	16		dB
Surround channel signal handling	SH_S1	S delay output: V_{CC} = 8.5 V, THD ≤ 3%	15	18		dB
Noise sequencer output level	Vns	Each channel	50	70	90	mV
Noise reduction frequency characteristics	Dec1	0 dB, 1 kHz	–1.5	0.0	+1.5	dB
	Dec2	–20 dB, 1 kHz	–24	–22.5	–21	dB
	Dec3	0 dB, 5 kHz	–1.5	0.0	+1.5	dB
	Dec4	–20 dB, 5 kHz	–23.3	–21.8	–20.3	dB
	Dec5	–40 dB, 5 kHz	–46.8	–45.3	–43.8	dB
ProLogic off, left and right channels	THDoff	L, Rch 20 to 20 kHz BPF		0.01	0.03	%
ProLogic off, left and right channels S/N	S/Noff	L, Rch CCIR/ARM		90	–80	dB
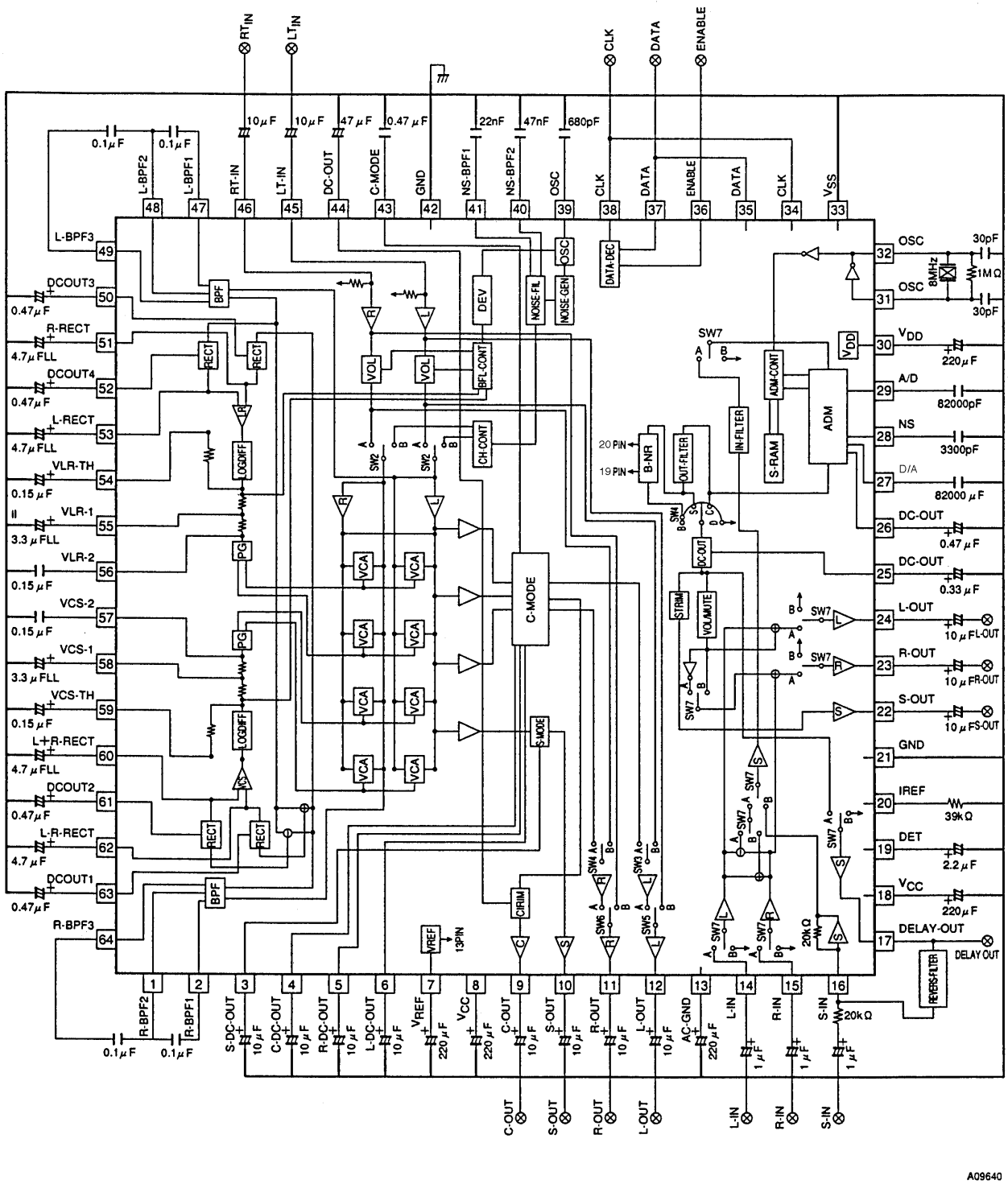
Sample Application Circuit