Ultra-Fast-Recovery Rectifier Diodes

Parameter / Type No.	Absolute Maximum Ratings					Electrical Characteristics (Ta=25°C)									Others	
	V_{RM} (V)	$I_{F(AV)}$ (A) With Heatsink	I_{FSM} (A) 50Hz Half-cycle Sinewave Single Shot	Tj (°C)	Tstg (°C)	V_F (V) max	I_F (A)	I_R (μA) $V_R=V_{RM}$ max	I_R(H) (mA) $V_R=V_{RM}$ Tj=150°C max	trr ① (ns)	I_F/I_{RP} (mA)	trr ② (ns)	I_F/I_{RP} (mA)	Rth(j-ℓ) (°C/W)	Mass (g)	Fig.
FMC-26U	600	3.0	50	–40 to +150		2.0 (1 Chip)	3.0	500	3.0	70	500/500	35	500/1000	4.0	2.1	Ⓐ
FMC-28U	800					3.0 (1 Chip)		100	0.5							
FMC-26UA	1200	3.0	50	–40 to +150		4.0 (2 Chips)	3.0	500	3.0	70	500/500	35	500/1000	4.0	2.1	Ⓑ
FMC-28UA	1600					6.0 (2 Chips)		100	0.5							

FMC-26U, 26UA

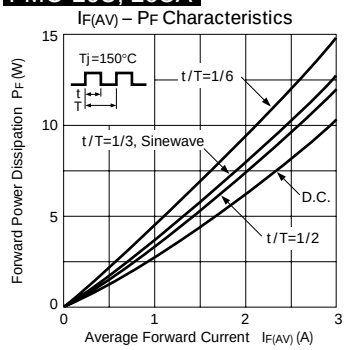

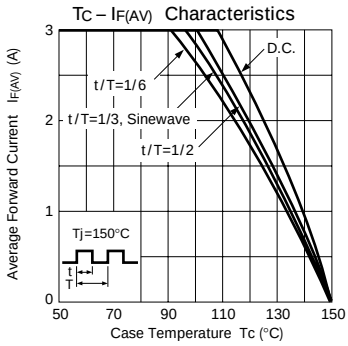

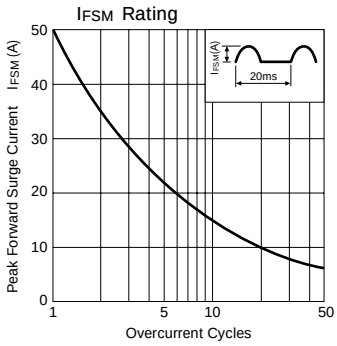

FMC-28U, 28UA

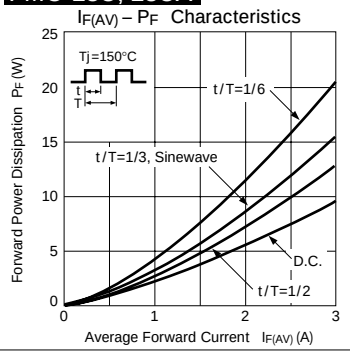

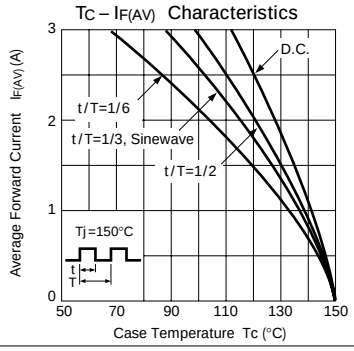

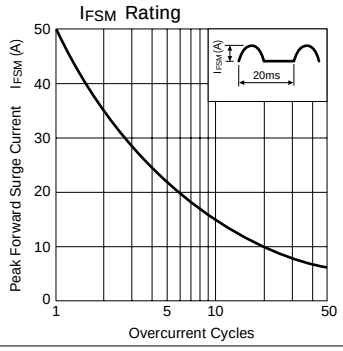

External Dimensions

(Unit: mm) (Full-mold)

Flammability: UL94V-0 or Equivalent

Fig. Ⓐ

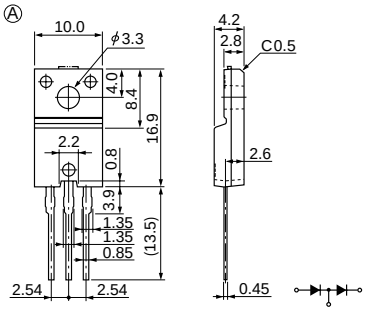
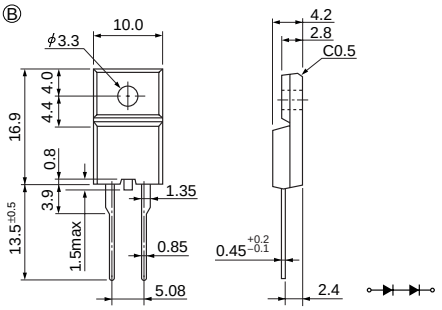
Fig. Ⓑ